MANUAL VARIFOCAL ZOOM LENSES

Item No.GM29090MCN

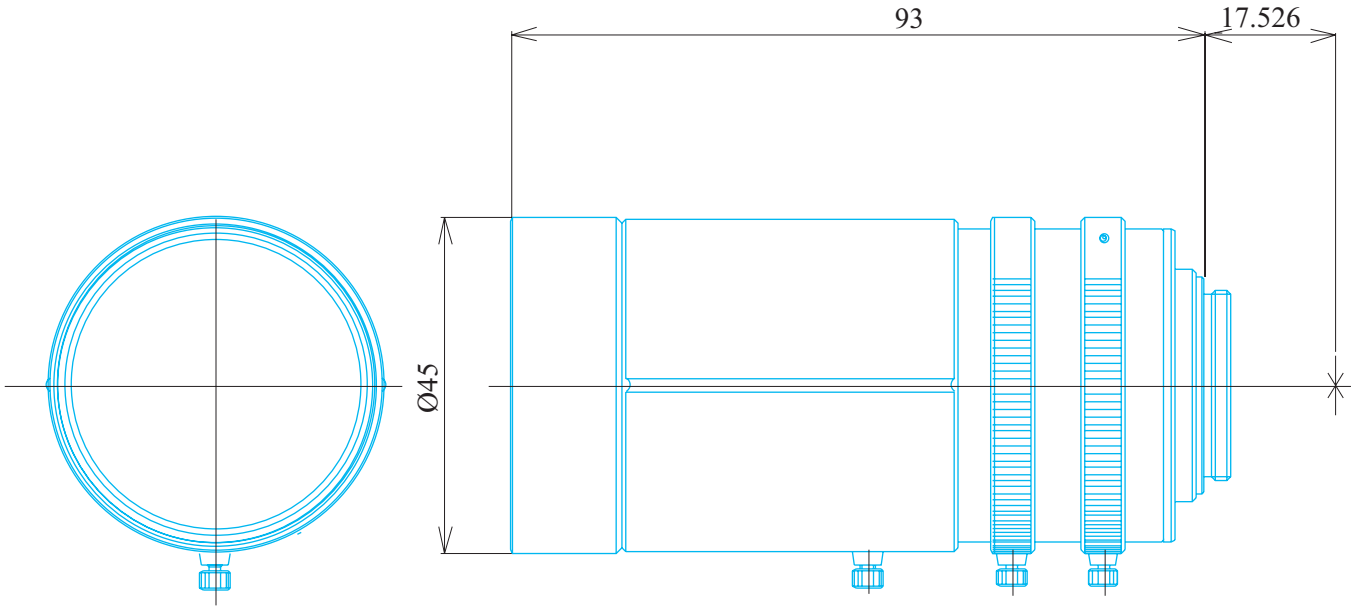

ITEM NO.		GM29090MCN
Focal Length		9 - 90 (mm)
Iris Range		F1.8 - 16
Angle of View (Hx V x D)	1/2"	41.1° x 30.3° x 52.6° - 4.2° x 3.1° x 5.2°
MOD		0.3m(W),1.0m(T)
Filter Thread		M=43,P=0.75
Dimention (D x L)		Ø45 x 93 (mm)
Weight		200 (g)

GOYO OPTICAL Inc.,

3-8-31 HAMASAKI, ASAKA, SAITAMA 351-0033, JAPAN,
TEL:+81-48-474-2235 FAX:+81-48-474-7373
http://www.goyooptical.com E-MAIL:info@goyooptical.com