1/3" Format Manual Iris Lenses

Item GM11634S

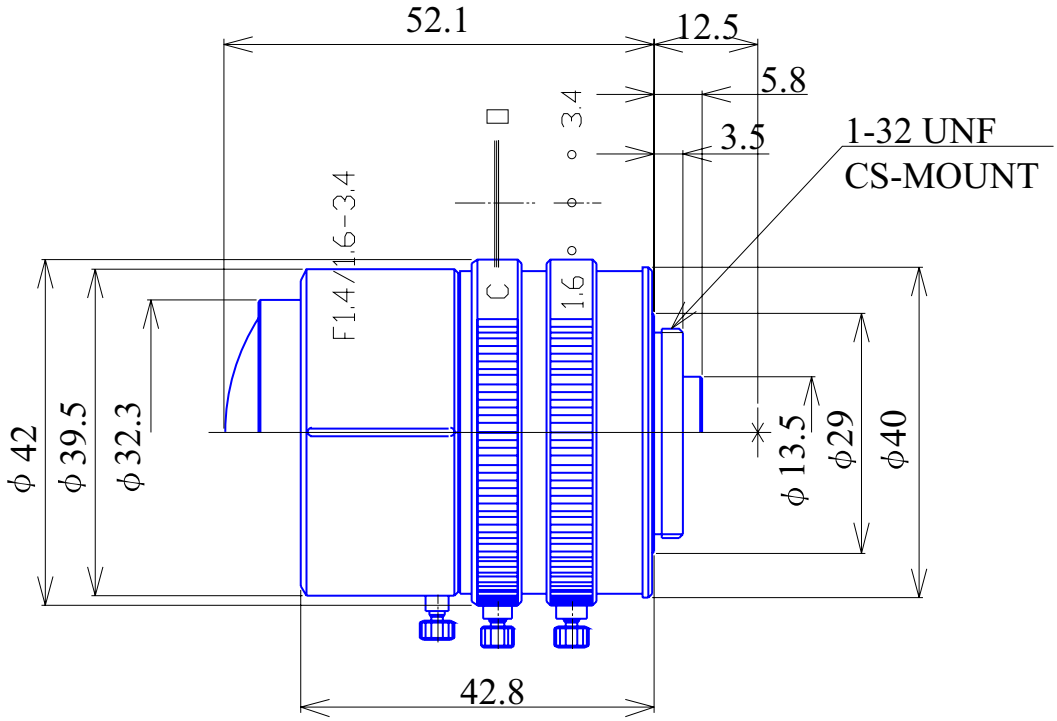

ITEM NO.		GM11634S	
Focal Length		1.6 - 3.4	(mm)
Iris Rnage		F1.4 - Close	
Angle of View (H x V)	1/3"	180.0° x 114.1° - 84.3° x 55.8°	
MOD		0.2	(m)
Dimention		42 x 52.1	(mm)
Weight		100	(g)
Mount		CS	
Notes		Varifocal	

GOYO OPTICAL Inc.,

Japanese Office

3-8-31 HAMASAKI,
ASAKA,
SAITAMA 351-0033,
JAPAN,
TEL:048-474-2235
FAX:048-474-7373
E-MAIL:info@goyooptical.com

German Office

KURHAUSSTR,3
ROOM N'19
D-55543 BAD KREUZNACH
GERMANY
TEL:0671-4822255
FAX:0671-43603
E-MAIL:info@goyooptical.com